This document is the property of Amphenol Corporation and is delivered on the express condition that it is not to be disclosed, reproduced or used, in whole or in part, for manufacture or sale by anyone other than Amphenol Corporation without its prior consent, and that no right is granted to disclose or to use any information in this document.

The marking on this product doesn't contain environmental hazardous material and must follow one or more specifications per Material Specification SS-00259 for Sony GP compliant or per directive 2011/65/EU for RoHS compliant or per IEC 61249-2-21 for Halogen Free compliant.

FOR REFERENCE ONLY

REVISIONS				
SYM	ECN No.	DESCRIPTION	DATE	BY
AX1		UNRELEASED REVISION	06/16/2017	Joseph Jiang

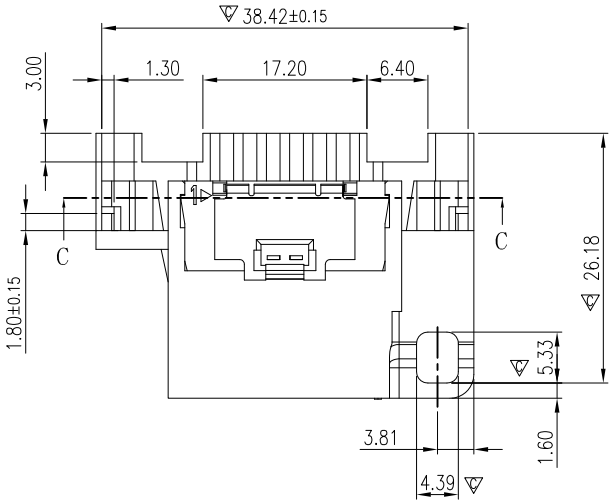

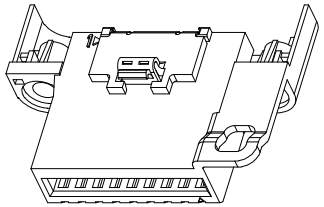

NOTE:
1. MATERIAL:
   MAIN HOUSING: PA 9T 30%GF, UL94V-0, COLOR: BLACK.
   CHIP TOP COVER: PA 66 W/O GF, UL94 V-0, COLOR: BLACK.
   CHIP HOUSING: LCP, 40%GF, UL94V-0, COLOR: BLACK.
   CONTACT: PHOSPHOR BRONZE C5191-H, T=0.3mm.
2. FINISH:
   CONTACT: SELECTIVE GOLD PLATING ON THE CONTACT AREA, 100μ" MIN. MATTE-TIN PLATING ON THE AREA.
   50μ" MIN. NICKEL UNDERPLATING OVERALL.
3. "▽" DIMENSION SHOULD BE MEASUREIN QIP.
4. CRITICAL DIMENSION ▼ MUST BE CONTROLED BY SPC.
5. THIS PRODUCT DOESN'T CONTAIN ENVIRONMENTAL HAZARDOUS PER DIRECTIVE 2011/65/EU FOR ROHS COMPLIANT.

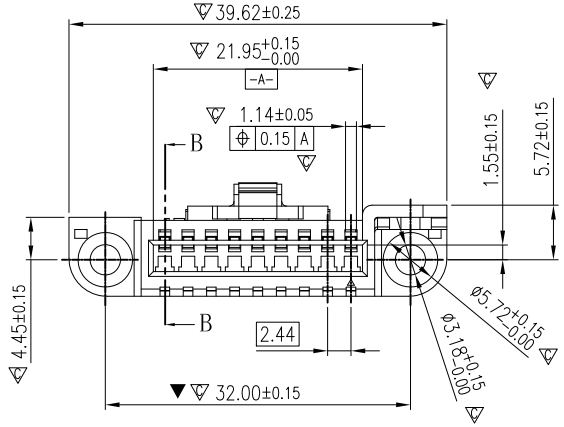

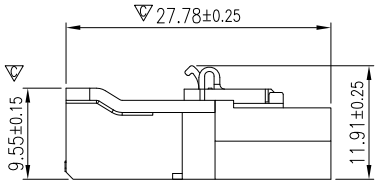

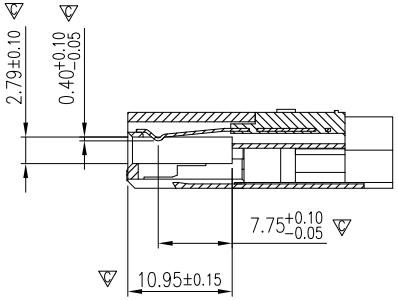

SEC B-B

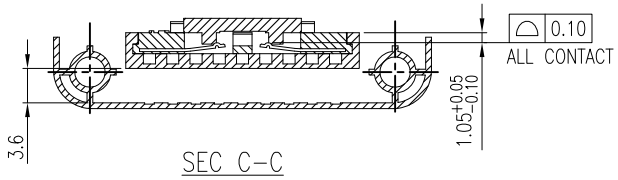

SEC C-C

TOLERANCE		APPROVALS		DATE
X.	±0.25	DRAWN	Joseph Jiang	06/16/2017
X.X	±0.15	DESIGNED	Joseph Jiang	06/16/2017
X.XX	±0.08	CHECKED	Chenny Yeh	06/16/2017
X.XXX	±0.05	APPROVED	Hank Hsu	06/16/2017
ANGULAR	±0.5°			
UNLESS OTHERWISE SPECIFIED		DWG TYPE	ENG DWG	PROJECT CODE TXXX

TITLE: EDGE CARD CONNECTOR FOR SMART FAN MODULE

UNIT: mm | SIZE: A1 | SCALE: NA | SHEET: 1 OF 1

Amphenol®
Amphenol Corporation
Amphenol Taiwan Corporation

PART No. GFMF02H01R0000HR
DWG No. EGFMF02H01R0000HR
REV. AX1